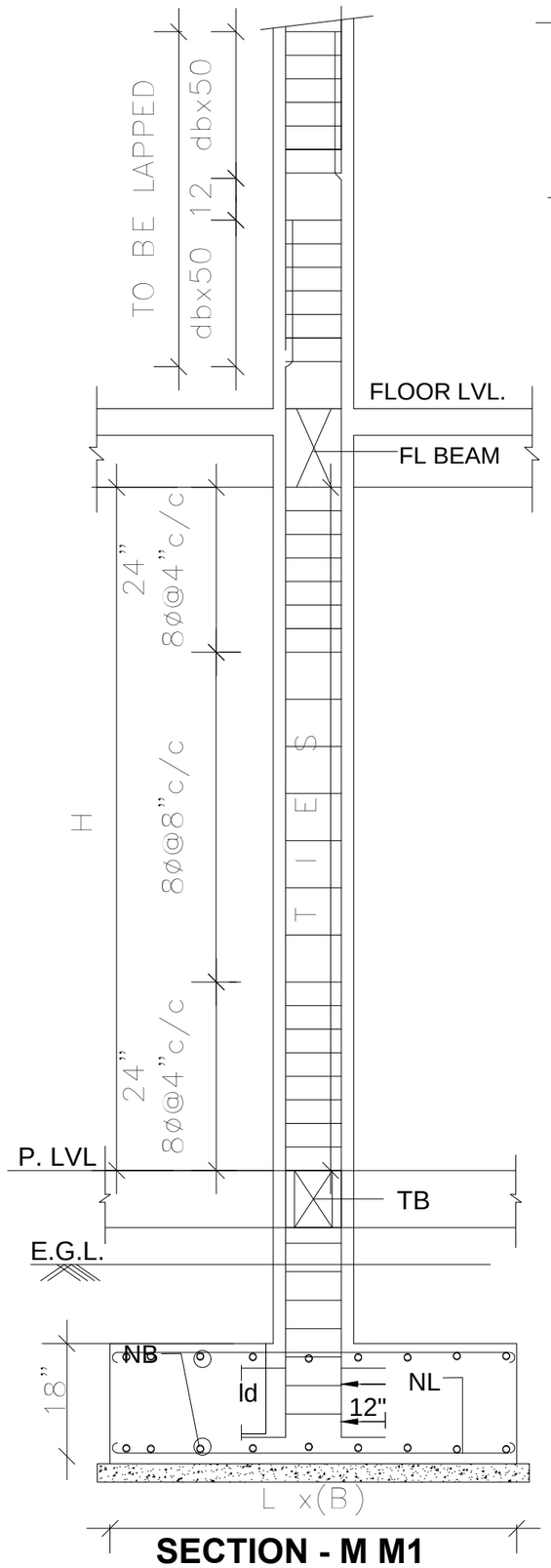

SECTION - M M1

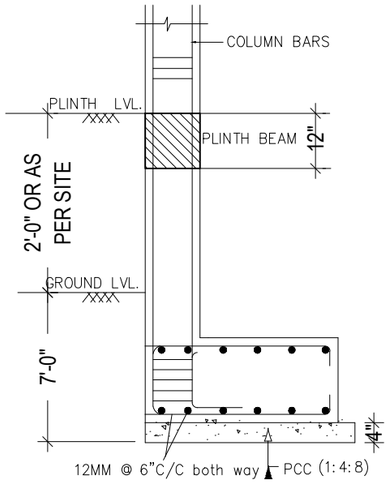

SECTION OF TYPICAL FOOTING

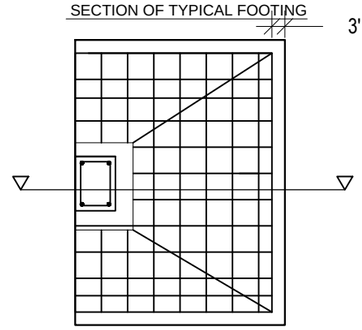

FOUNDATION

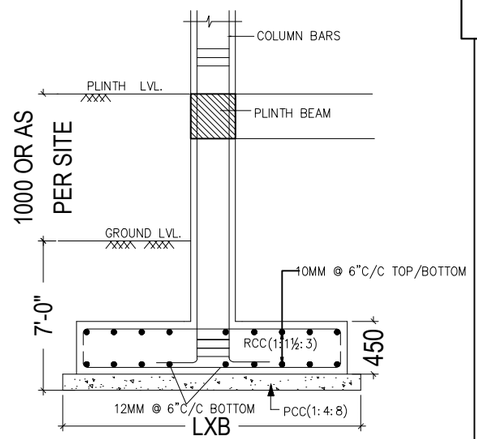

SECTION OF TYPICAL FOOTING

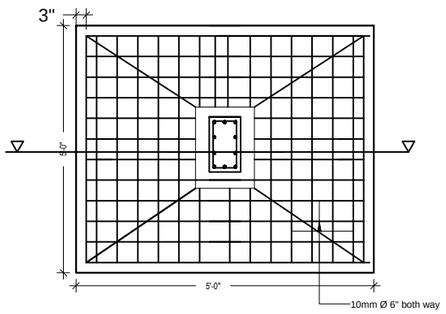

COLUMN

FOOTING SCHEDULE

S. NO.	FOOTING NO.	FOOTING SIZE		DEPTH OF FOOTING		GRADE OF CONC.	BOTTOM REINFORCEMENT	
		LENGTH (L)	WIDTH (W)	(d)	(D)	MIX	PARALLEL WITH SHORTER DIRECTION (A)	PERALLEL WITH LONGER DIRECTION (B)
(1)	F1	4'-00"	4'-00"	–	22"	M25	10#@6"C/C	10#@6"C/C
(2)	F2	5'-00"	5'-00"	–	22"	M25	10#@6"C/C	10#@6"C/C

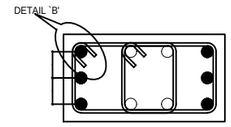

TYP. COLUMN SECTION SHOWING PLACEMENT OF LONGITUDINAL BAR
(ALL BARS SHALL BE PLACED EQUALLY SPACED)

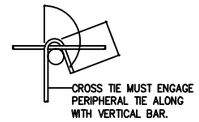

TYPICAL DETAIL OF LINK

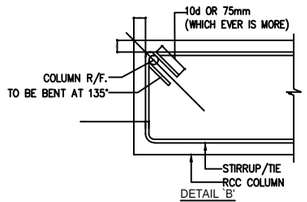

DETAIL 'B'
(TYPICAL DETAILS OF 135° HOOK TO BE PROVIDED TO ALL RINGS)

L0
(a) LARGER LATERAL DIMESION OF THE COLUMN
(b) 1/6 OF CLEAR SPAN OF COLUMN
(c) 450mm SHALL NOT BE LESS THAN

SCHEDULE OF PLINTH BEAM

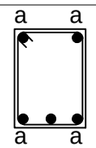

a =6 no. 16mm Ø
Ring =7"X9" 8mm Ø
8" C/C

PLINTH BEAM (PB2)
9"X12"

SCHEDULE OF COLUMN

COUMN NAME	COUMN SIZE	REINFORCEMENT	COLUMN DESIGN	NO. OF COL.
C1	9"X9"	a = 4-16Ø Ring =7"X7" 8mm Ø 6" C/C	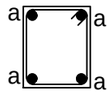	12
C2	9"X12"	a = 6-16Ø Ring =7"X10" 8mm Ø 6" C/C	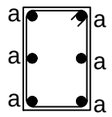	04

DETAILS OF SLAB BEAM-B1&B2

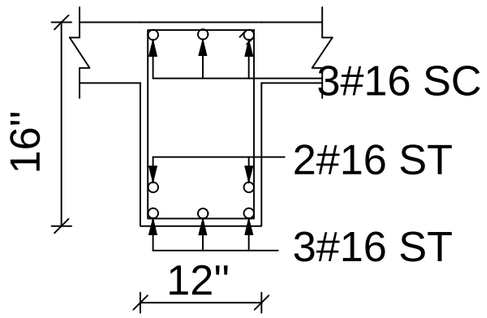

Sec1-1
B2

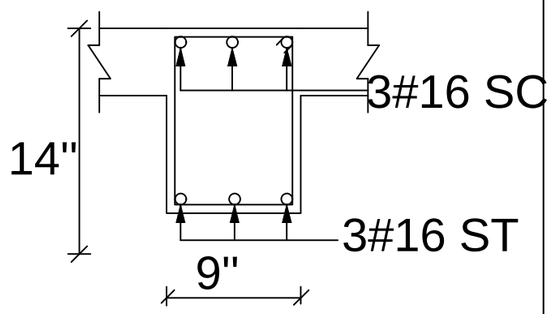

Sec1-1
B1

OWNER

GENERAL NOTES :-

1- ALL DIMENSIONS ARE IN INCHES UNLESS NOTED OTHERWISE.
2- NO DIMENSIONS ARE TO BE SCALED FROM THIS DRAWING.
3- CONTRACTORS MUST VERIFY ALL DIMENSIONS ON SITE BEFORE COMMENCING OF WORK.
4- IN CASE OF ANY DIFFERENCE IN DIMENSIONS AND LEVELS BETWEEN ARCHITECTURAL AND STRUCTURAL DRAWINGS CONTRACTOR SHOULD SEEK THE CLARIFICATION BEFORE PROCEEDING.

STRUCTURAL NOTES :-

1- CONCRETE GRADE WILL BE M 25.
2- COVER TO OUTER LAYER OF MAIN REINFORCEMENT SHALL BE SPECIFIED BELOW OR DIA OF MAIN REINFORMENT BAR WHICHEVER IS GREATER(UNLESS NOTED OTHERWISE.)
a) IN FOOTINGS -50mm
b) IN COLUMNS -40mm
c) IN BEAMS & SLAB EDGES-25mm OR TWICE THE DIA. MAIN REINF. BAR.
d) IN SLABS -20mm.
3- ALL REINFORCEMENT WILL BE HSD FE-500D STEEL CONFIRMING TO IS 1786-2008 OR LATEST UNLESS NOTED OTHERWISE.
4- READ THIS DRAWING INCONJUNCTION WITH RELEVANT ARCH. & STRUCTURAL DRG., PLUMBING DRG., SERVICES ETC.

REVISION

CLIENT: –
FOR MR.

PROJECT: –

TITLE:
STRUCTURAL DRAWING

SCALE	DATE
1:100(A3)	07.05.24

DRAWING NO.	DESIGN	DRAWN
01/RLR/IT-01(IT)	R.C.	Er. Vishal Sonkar
PRE-GFC	REV. R0 REV.DATE	CHECKED BY Er.DIVYA SAGAR

structural consultant –

PDM DESIGN & CONSULTANTS
Regd.Off. :
348 ,Meerut road Krishna Nagar
Ghaziabad
MOB-9219881636, 8005127006
E-MAIL :pdmdesign6@gmail.com
WEB- www.pdmdesign.com
Branch Off. :
HN-236 PadarthLal lane Washelleyganj
Mirzapur