Table-4 Details of slab reinforcement

SR. NO.	SLAB NO.	THICKNESS (MM)	SLAB REINFORCEMENT	
			MAIN BARS (In shorter span)	CROSS BARS (In longer span)
1	S1	150	#10@150	#10@150

TABLE -3 DETAILS OF BEAMS AT SLAB LVL-

SR. NO.	TIE BEAM NO.	BEAM SIZE		LONGITUDINAL REINFORCEMENT				STIRRUPS		SIDE FACE REINF. (ON EACH FACE)
				TOP FACE REINFORCEMENT		BOTTOM FACE REINFORCEMENT		END ZONE '2L'STPS	MIDDLE ZONE '2L'STPS	
		W mm	D mm	Ast1 (Thro at Top)	Ast2 Extra @ Support	Asb1 Extra @ Bottom	Asb2 Extra @ middle			
1	B1	12"	18"	2#20	2#16	3#20&2#16	2#16	#8@125	#8@150	2#16
2	B2	9"	12"	3#16	2#16	3#16		#8@125	#8@150	
2	B2	9"	12"	3#16		3#16		#8@125	#8@150	

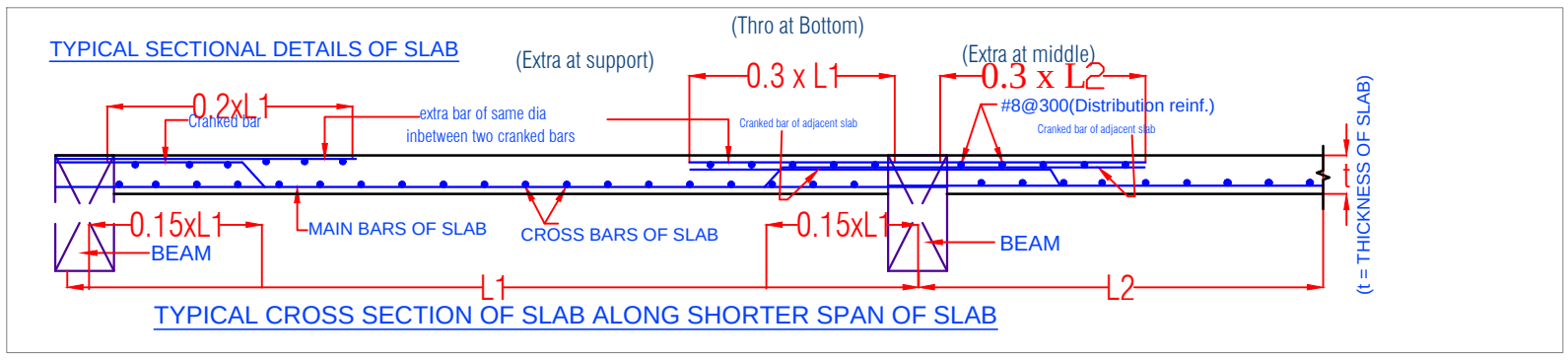

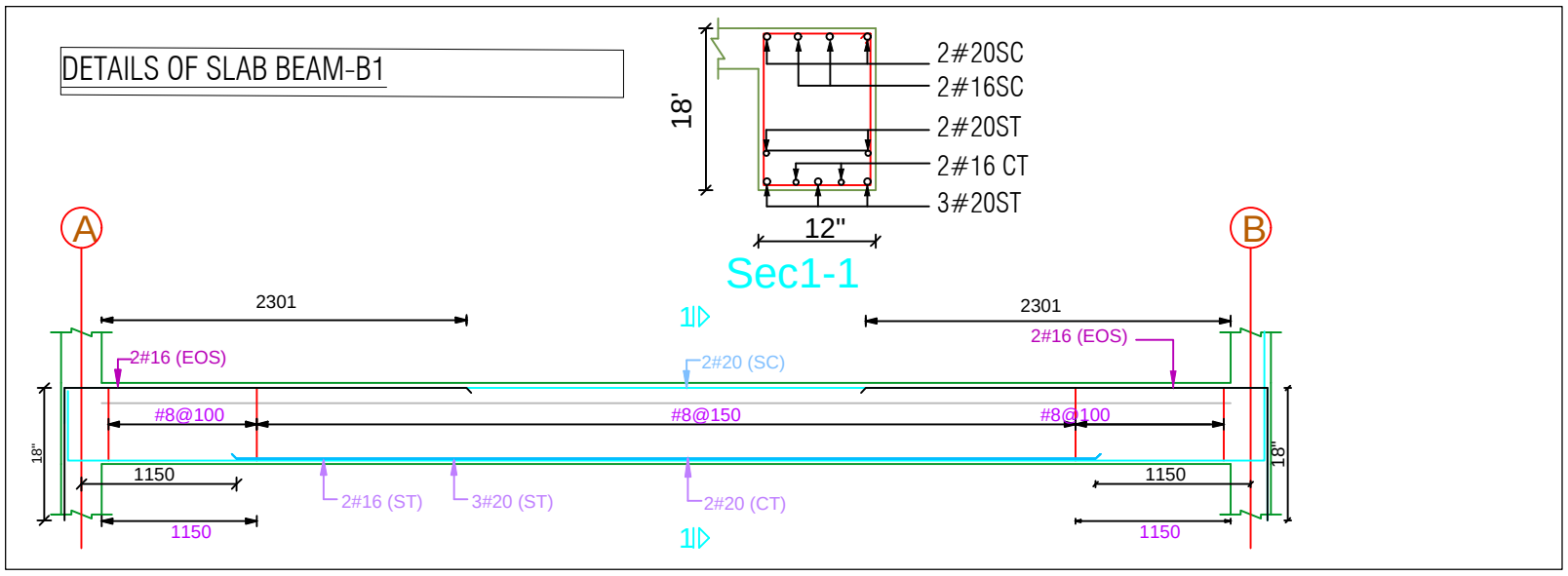

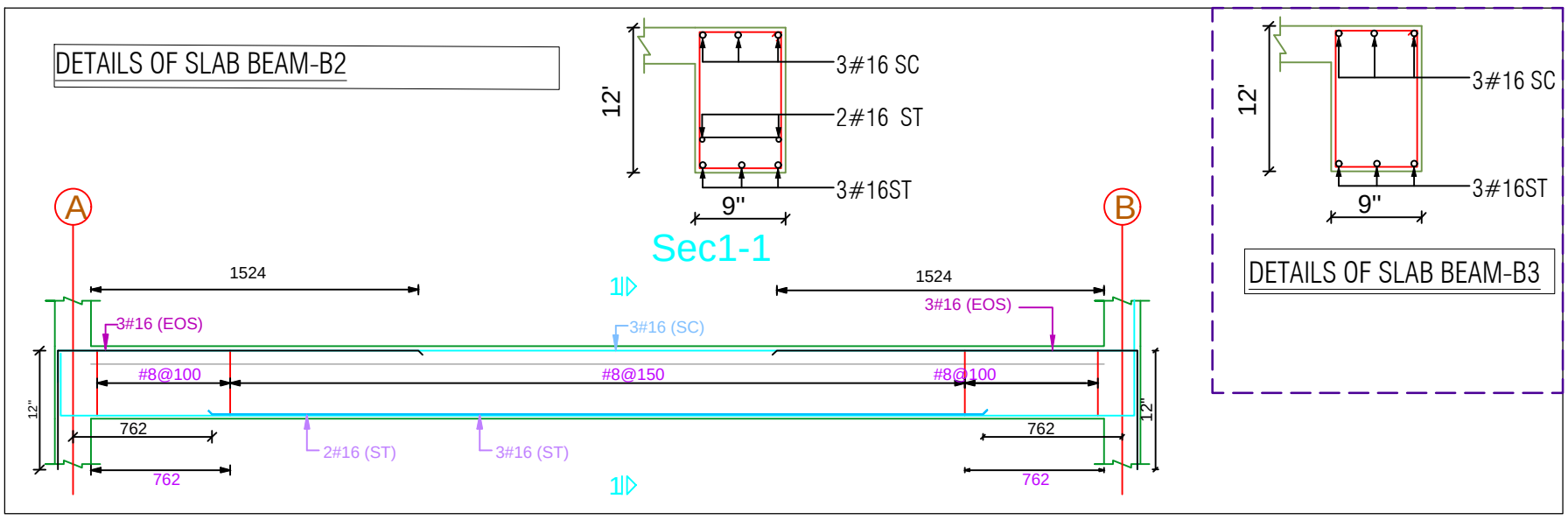

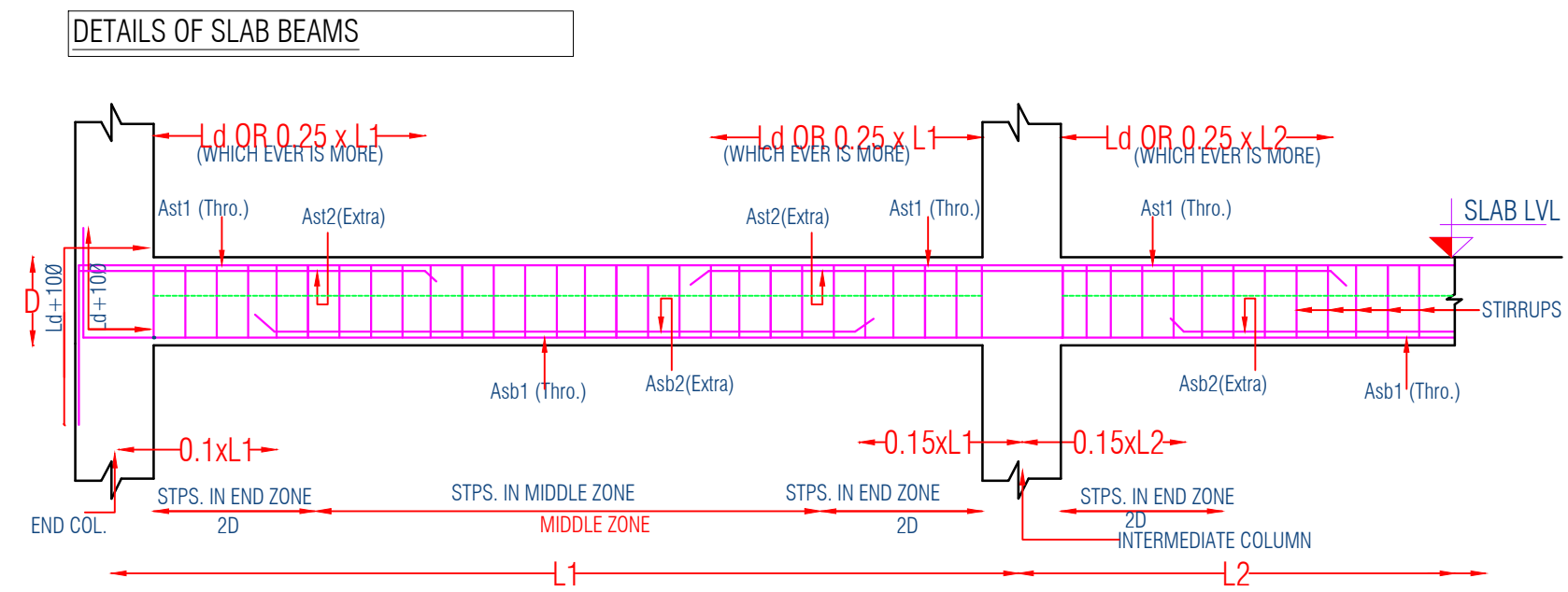

TYP.REINF. DETAILS IN THE SLAB BEAMS SPANNING BETWEEN SUPPORT TO SUPPORT

FOR DETAILS REFER TABLE [3] BELOW

NOTE : AT THE JUNCTION OF TWO DIFF. NUMBER OF BEAMS THE HEIGHER REINFORCEMENT AT THE SUPPORT SHALL BE ADDOPTED.

NOTES:-

[GENERAL]

[1] ALL DIMENSIONS ARE IN M.M. UNLESS OTHERWISE MENTIONED.
[2] ONLY FIGURED DIMENSIONS ARE TO BE FOLLOWED NEITHER THE BARS SHALL BE COUNTED NOR THE DIMENSIONS SCALED FROM THE DRG.
[3] ANY DESCREPANCY IN THE DRGS. SHALL BE BROUGHT TO THE NOTICE OF THE ARCHITECT / CONSULTANT AND CLARIFICATION OBTAINED IN WRITING PRIOR TO EXECUTION OF WORK.
[4] HIGH YIELD STRENGTH DEFORMED BARS OF YIELD STRESS 500 N/MM2 (Fe-500) WHICH SHALL CONFORM TO1786-1985 SHALL BE USED AS REINFORCEMENT
[5] CLEAR COVER OF OUTER LAYER REINF. SHALL BE AS FOLLOWS.
(a) FOUNDATION = 50 mm. (b) COLUMN = 40 mm. (c) BEAM = 30 mm. OR DIA OF BAR WHICHEVER IS MORE (d) SLAB = 20 mm. (c) WAIST SLAB = 20 mm.
[6] END/SIDE COVER OF ALL REINFORCEMENT IN BEAMS & SLAB = 25 mm. OR DIA OF BAR WHICHEVER IS MORE
[7] THE COVER BLOCK OF CEMENT MORTAR SHALL BE USED TO ENSURE THE REQD. COVER OF REINFORCEMENT
[8] DEVELOPMENT LENGTH (Ld) FOR DIFFERENT DIA. OF BARS FOR CONC. MIX M - 20 SHALL BE 56 X DIA OF BAR.
[9] CONC. MIX FOR R.C.C. WORK SHALL BE OF GRADE M - 20 CONFORMING TO I.S. 456 - 2000.
[10] NECESSARY FIXTURE FOR ELECTRICAL, PLUMBING, ETC. SHALL BE PROVIDED IN SLAB, BEAMS BEFORE EXECUTION AS PER RELEVANT DRGS.
[11] THE STRUCTURE HAS BEEN DESIGNED B+G = 2
[12] P.C.C.(1:4:8) SHALL BE PROVIDED.
[13] 15 TH.(1/2 BRICK) WALL - 1:4 CEMENT: SAND MORTAR SHALL BE USED
[14] 230 TH.(1 BRICK) WALL - 1:6 CEMENT: SAND MORTAR SHALL BE USED.
[15] THE VERTICAL FACE OF CONCRETE AT JUNCTION OF WALL & RCC MEMBER SHALL BE RAKED TO GIVE A ROUGH SURFACE & 1:4 CEMENT:SAND MORTAR SHOULD BE APPLIED TO DEVELOPE BOND BETWEEN BRICK WALL & RCC MEMBER.

[FOUNDATION]

[1] LAYOUT OF BUILDING SHALL BE GIVEN FROM THE ARCH.DRG.
[2] THE DESIGN DATA FOR FOUNDATION HAS BEEN TAKEN FROM SOIL TEST REPORT PROVIDED BY THE DEPT./ CLIENT

[COLUMNS]

[1] TIES IN PORTION OF COL. & BEAM JUNCTION SHALL BE SAME AS END ZONE.
[2] OVER LAPS ARE ALLOWED ONLY AT MIDDLE ZONE OF THE COLUMNS.
[3] NOT MORE THAN 50 % OF BARS SHALL BE LAPPED AT SECTION AND OVERLAPPED SHOULD BE STAGGERED.
[4] VERTICAL BARS OF RCC COLUMN AT TOP SLAB SHALL BE EXTENDED UPTO TOP OF BEAM & BENT INTO BEAM BY DEVELOPMENT LENGTH.

[BEAMS]

[1] FOR LOCATION OF BEAMS REFER SLAB PLAN.
[2] WHERE TWO LAYERS OF REINF. BARS ARE TO BE PROVIDED, SPACER BAR ARE TO BE PROVIDED AT SPACING OF 1000 MM. MAX. AND THE DIA OF THE SPACER BAR SHALL BE HIGHER OF DIA OF LONGITUDINAL BARS OR 25 MM.
[3] MAX. 3 NOS. OF BARS SHALL BE PROVIDED IN A LAYER OF 230 WIDE BEAM.
[4] AT THE JUNCTION OF TWO DIFF. NUMBER OF BEAMS THE HEIGHER REINF. AT THE SUPPORT SHALL BE ADDOPTED.
[5] OVER LAP IN TOP BARS SHALL BE NEAR MID SPAN & IN BOTTOM BARS SHALL BE NEAR SUPPORT OR AT SUPPORT
[6] THE DEPTH OF BEAM/ LINTEL MONOLITHIC WITH SLAB AS SPECIFIED IN SCHEDULE SHALL BE INCLUSIVE OF SLAB THICKNESS UNLESS OTHERWISE SPECIFIED

[SLABS]

[1] FOR SLAB REINFORCEMENT REFER TABLE-4 (DETAIL OF SLAB REINFORCEMENT)
[2] ALTERNATE BOTTOM BARS SHALL BE CRANKED AT L / 7 OF SPAN AND EXTENDED UPTO L/3 IN ADJACENT SLAB PANEL AS SHOWN IN TYP. SECTION OF SLAB
[3] EXTRA BAR OF SAME DIA OF SLAB BARS SHALL BE PROVIDED AT TOP FACE IN BETWEEN TWO CRANCKED BARS AS SHOWN IN TYP. SECTION OF SLAB
[4] THE CROSS REINF. / TEMP. REINF. BELOW TOP REINF OF SLAB ,i.e.#8@300c/c IS TO BE PROVIDED JUST BELOW THE MAIN TOP STEEL AS SHOWN IN TYP. SEC.OF SLAB
[5] THE FIRST MAIN BAR OF SLAB SHALL BE PLACED AT 80 mm. OR HALF THE SPACING SPECIFIED WHICHEVER IS LESS FROM THE FACE OF SUPPORT

S.No.	R.No.	Date	Description	By

REVISION

CLIENT:-

SAGAR CONSTRUCTION GROUP

SAGAR CONSTRUCTION GROUP
Regd.Off. :
236 First Floor Bank of Baroda
New Arya Nagar, Ghaziyabad-201002
MOB-9219881636, 8005127006
E-MAIL :info@scgroups.in
WEB- https://scgroups.in/
Branch Off.:H.N.- 236 Washelleyganj, Mirzapur-231001

PROJECT:-
RESIDENCE AT VARANASI

TITLE:
BEAM & SLAB DETAILS

SCALE	DATE	DESIGN	DRAWN
:100(A3)	04/05/25	R.C.	ER.MILAN

DRAWING NO.	REV. R0	CHECKED BY
01/RLR/BL-01(BL)	REV.DATE	ER.DIVYA SAGAR

PRE-GFC